ELECTRONIC CROSSOVER NETWORK

KEC-301

SERVICE MANUAL

KENWOOD

©1989-11 PRINTED IN JAPAN
B51-6106-00(B)3045

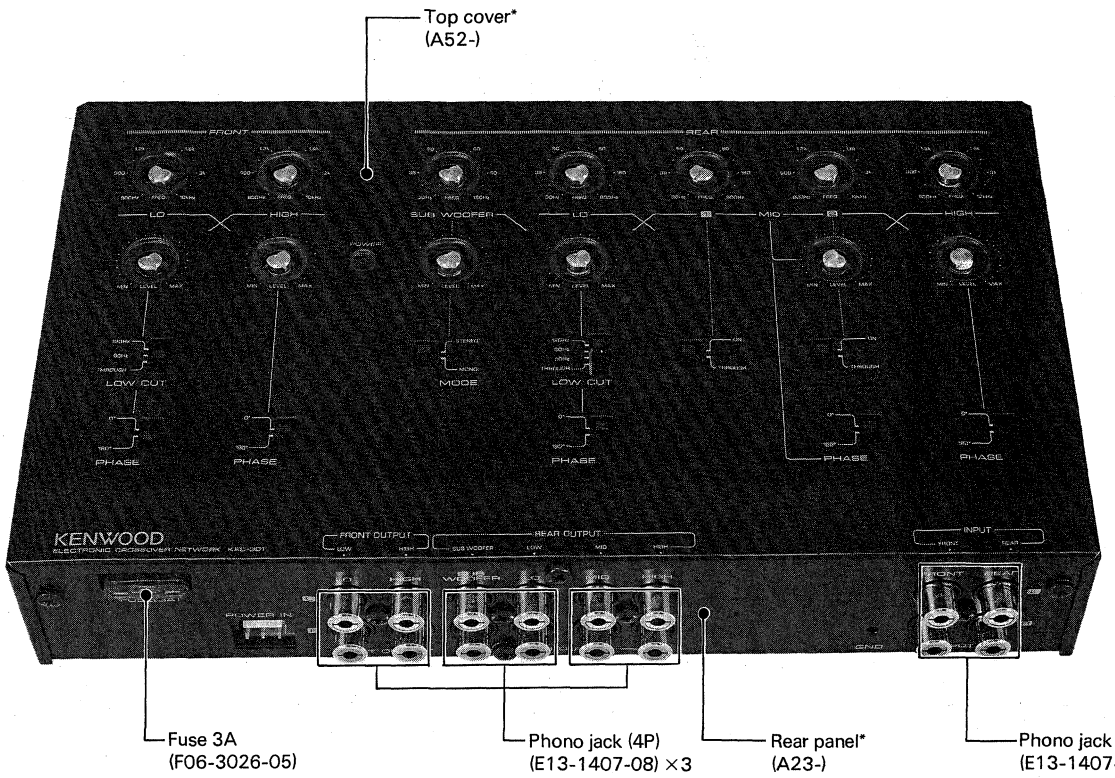

* Refer to parts list on page 9.

CONTENTS

BLOCK DIAGRAM 2
PC BOARD 3
SCHEMATIC DIAGRAM 5
EXPLODED VIEW 8
PARTS LIST 9
SPECIFICATIONS ..... BACK COVER

KEC-301

BLOCK DIAGRAM

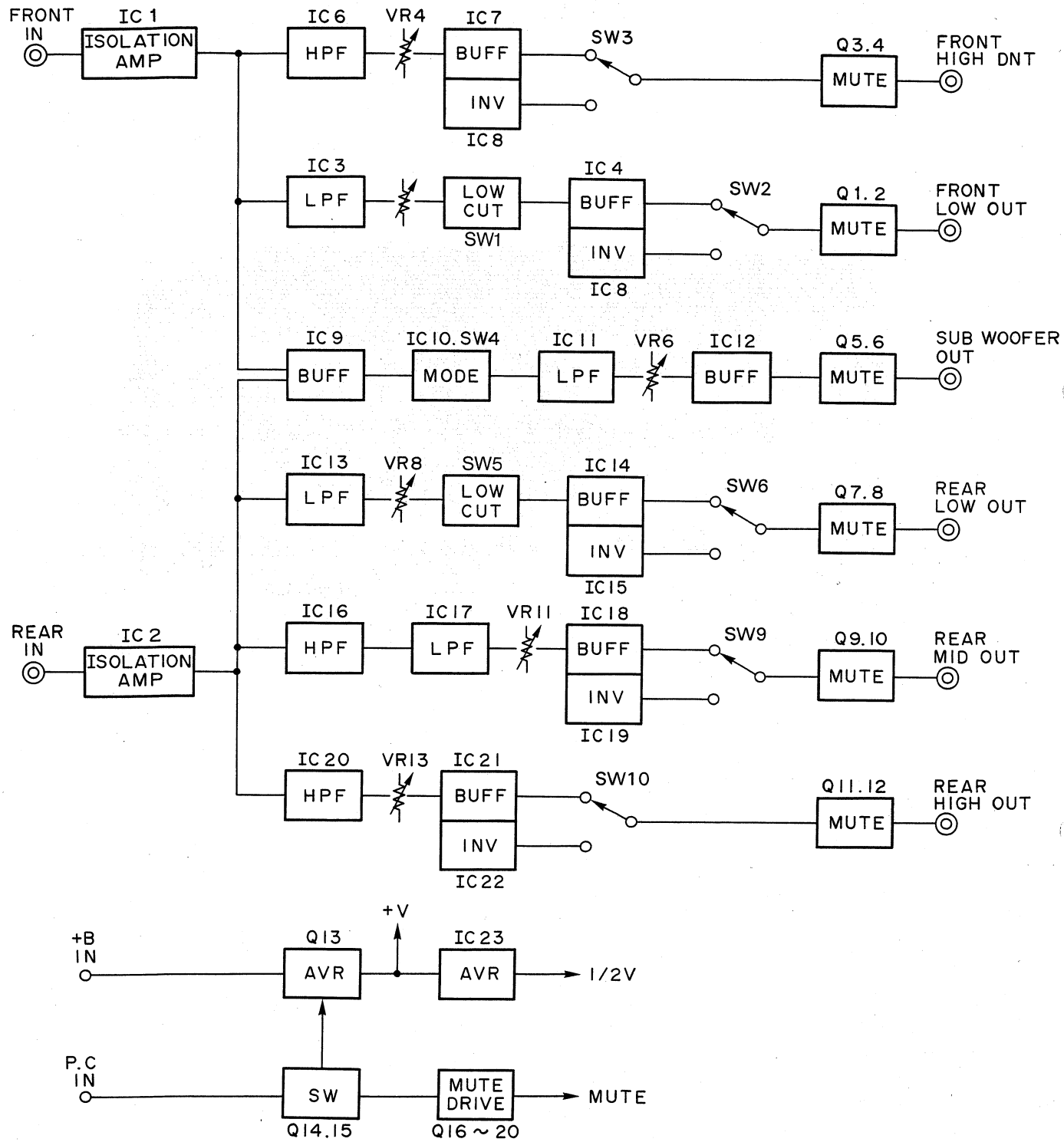

P.C. BOARD (Component side view)

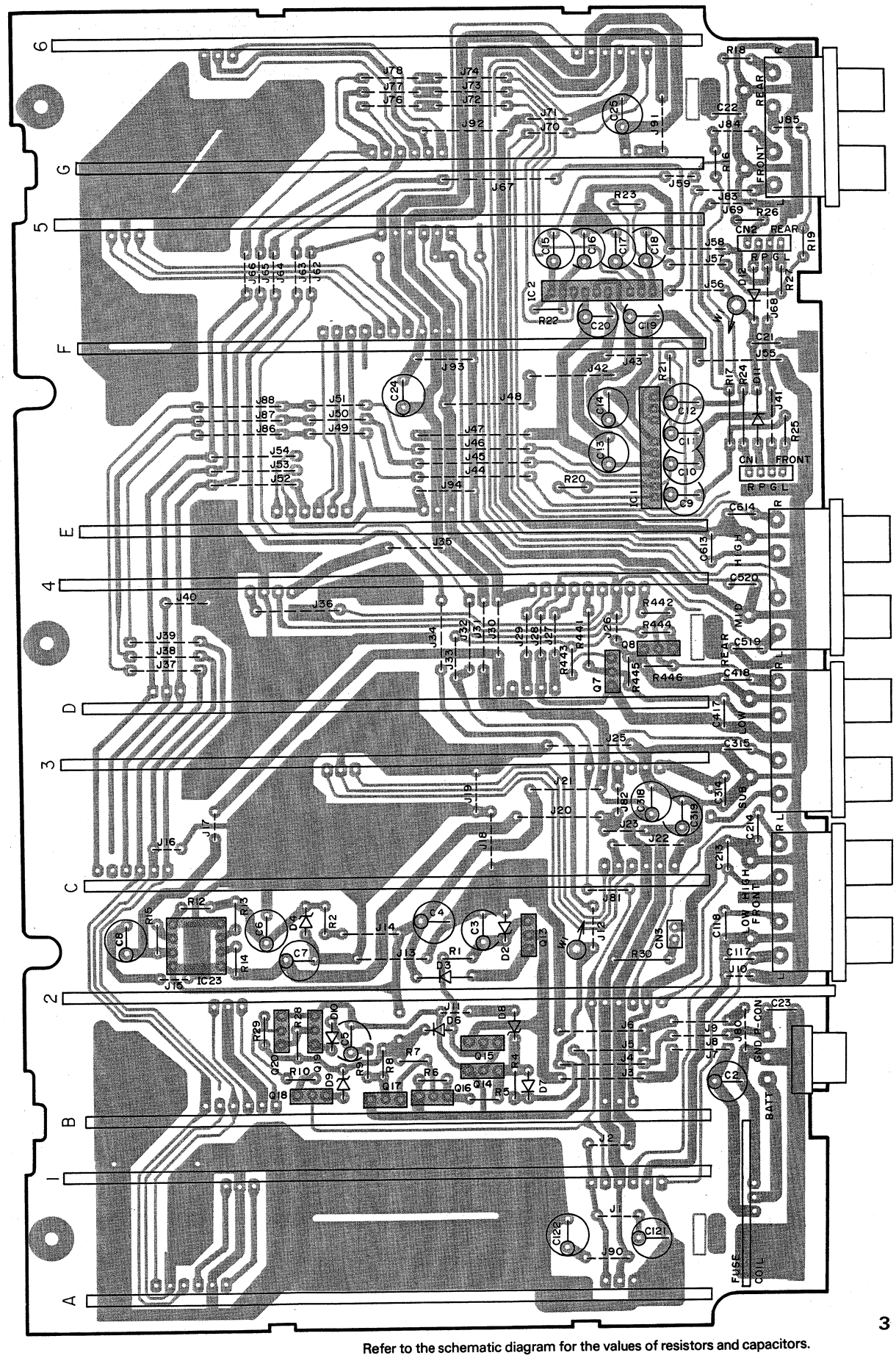

Refer to the schematic diagram for the values of resistors and capacitors.

P.C. BOARD (Component side view)

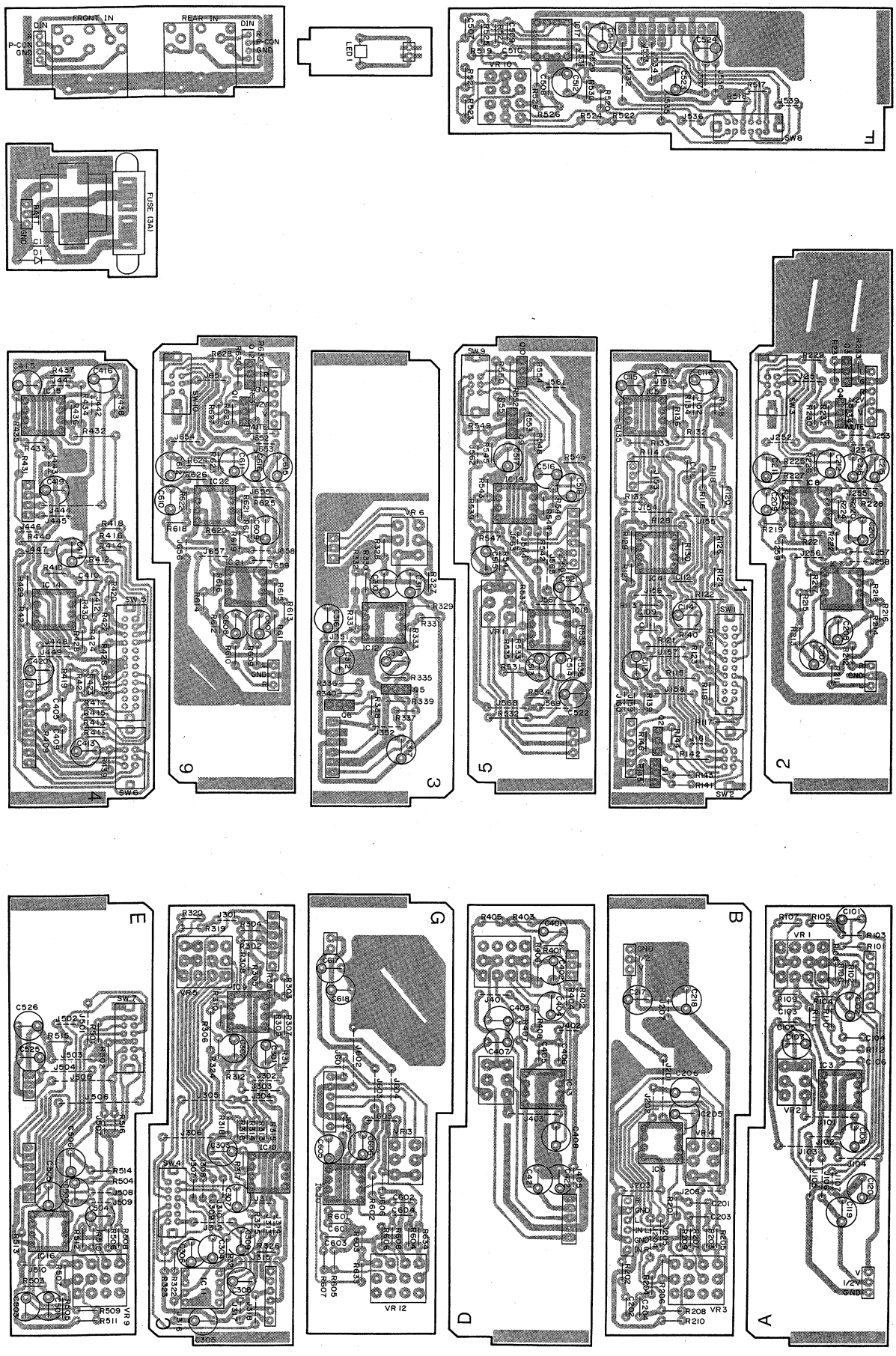

Refer to the schematic diagram for the values of resistors and capacitors.

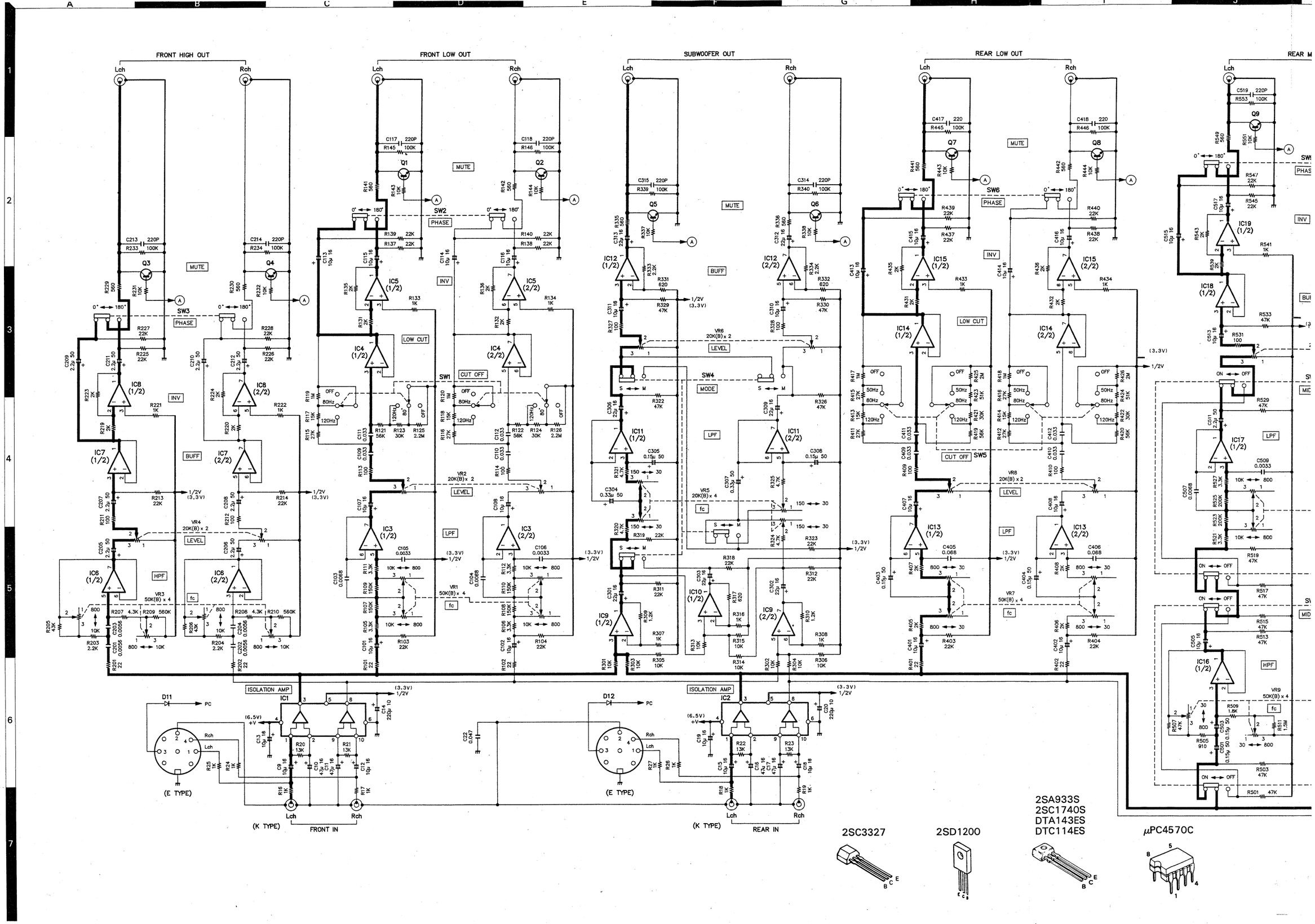
FRONT HIGH OUT
FRONT LOW OUT
SUBWOOFER OUT
REAR LOW OUT
REAR M
Lch
Rch
MUTE
PHASE
INV
BUFF
LEVEL
HPF
LOW CUT
CUT OFF
MODE
LPF
ISOLATION AMP
(E TYPE)
(K TYPE)
FRONT IN
REAR IN
2SC3327
2SD1200
2SA933S
2SC1740S
DTA143ES
DTC114ES
μPC4570C

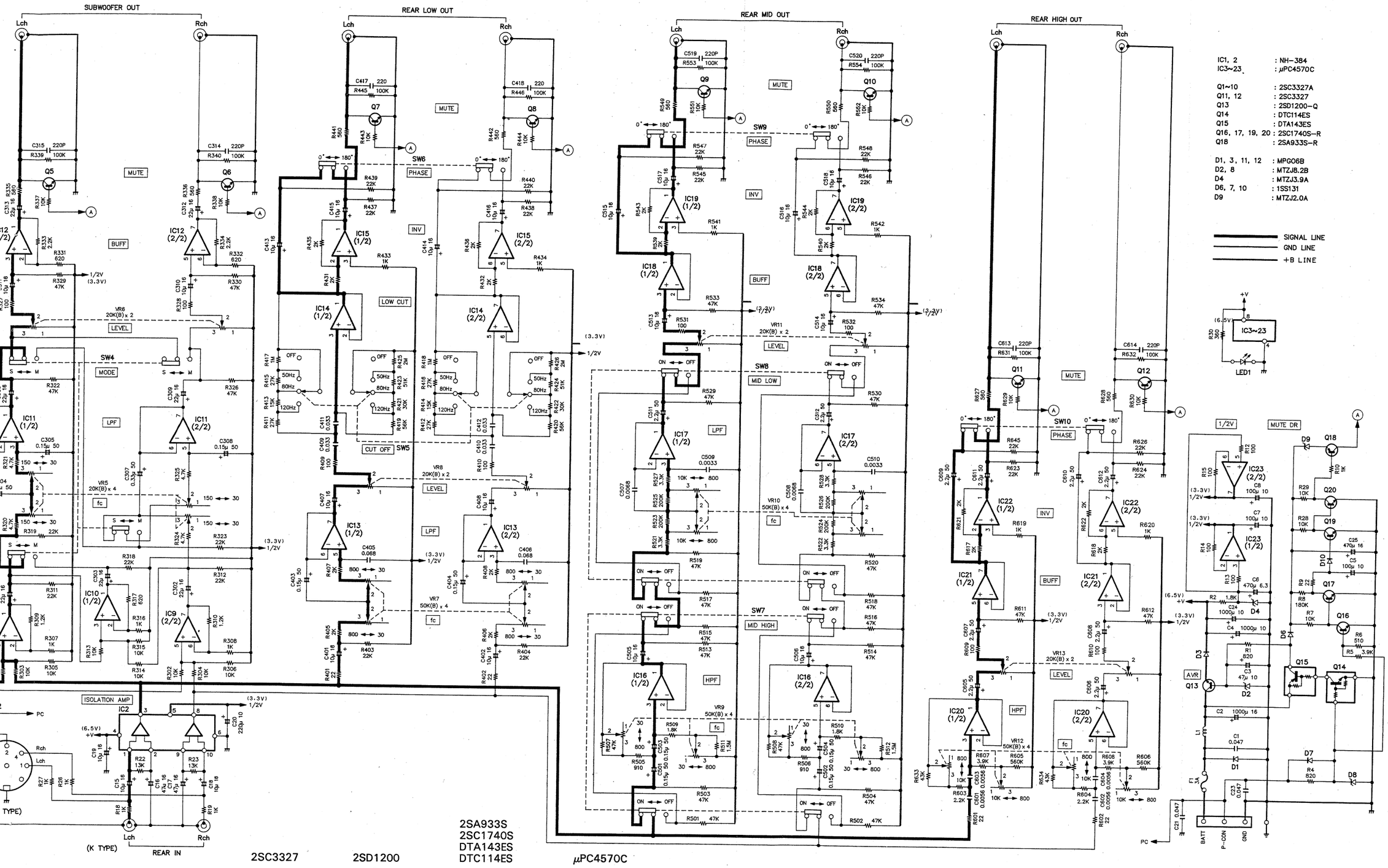

IC1, 2 : NH-384
IC3~23 : μPC4570C

Q1~10 : 2SC3327A
Q11, 12 : 2SC3327
Q13 : 2SD1200-Q
Q14 : DTC114ES
Q15 : DTA143ES
Q16, 17, 19, 20 : 2SC1740S-R
Q18 : 2SA933S-R

D1, 3, 11, 12 : MPG06B
D2, 8 : MTZJ8.2B
D4 : MTZJ3.9A
D6, 7, 10 : 1SS131
D9 : MTZJ2.0A

SIGNAL LINE
GND LINE
+B LINE

2SC3327

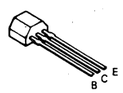

2SD1200

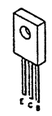

2SA933S
2SC1740S
DTA143ES
DTC114ES

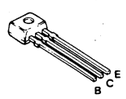

μPC4570C

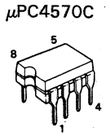

DC voltages are as measured with a high impedance voltmeter with no signal input. Values may vary slightly due to variations between individual instruments or/and units.

Y09-3410-10

KEC-301

KENWOOD

EXPLODED VIEW

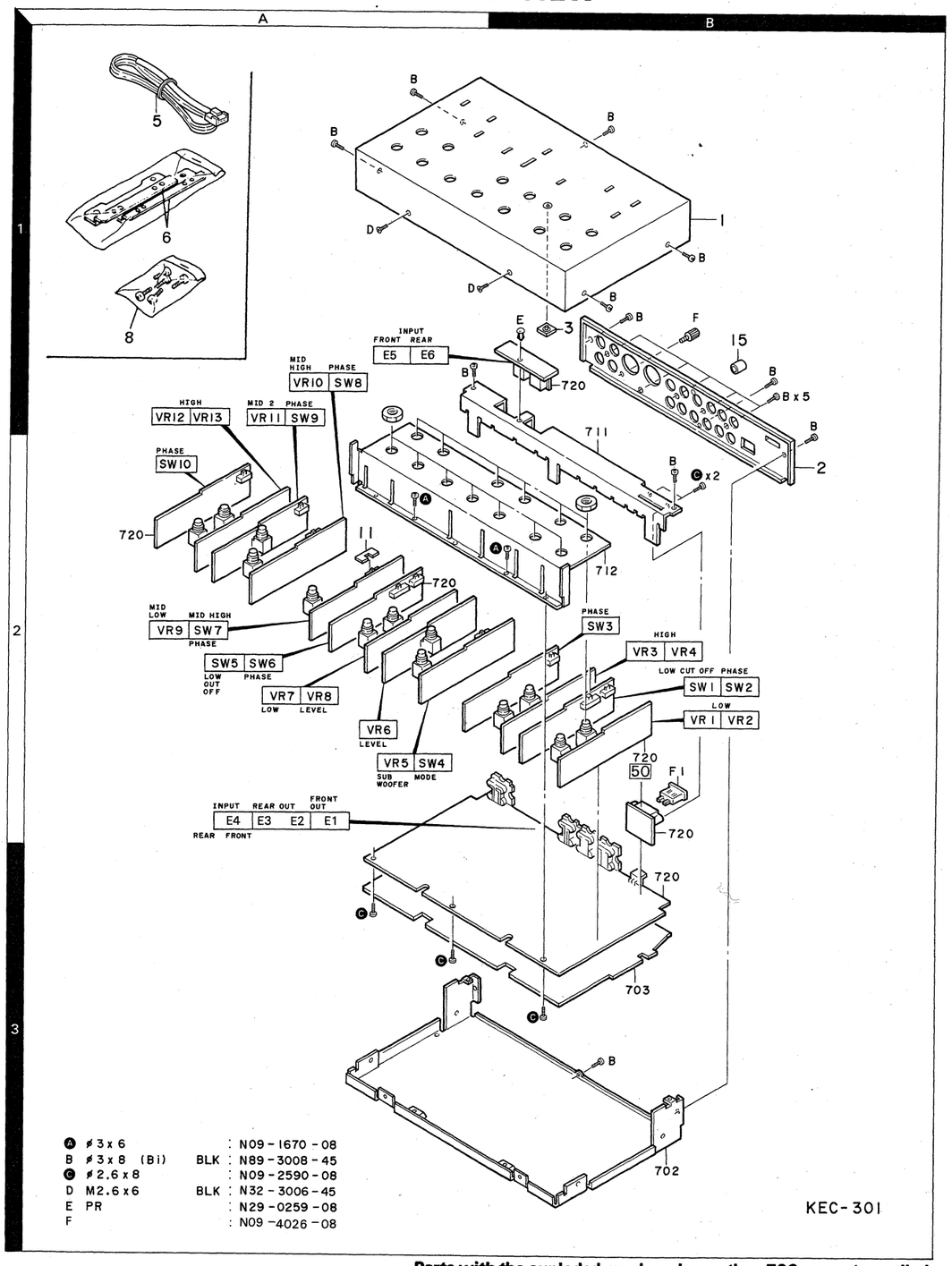

Parts with the exploded numbers larger than 700 are not supplied.

PARTS LIST

*New Parts Parts without Parts No.are not supplied.

Ref.No. 参照番号	Address 位置	New Parts 新	Parts No. 部品番号	Description 部品名／規格	Destination 仕向	Remarks 備考
			KEC-301			
1	1B	*	A52-0619-08	TOP COVER	K	
1	1B	*	A52-0620-08	TOP COVER	E	
2	2B	*	A23-5018-08	REAR PANEL	K	
2	2B	*	A23-5019-08	REAR PANEL	E	
3	1B	*	B19-0838-08	LIGTHING BOARD		
-			B44-6006-04	UPC CODE LABEL		
-			B44-2165-04	UPC CODE LABEL		
-			B46-0100-20	WARRANTY CARD		
-			B50-7984-00	INSTRUCTION MANUAL	K	
-			B50-7953-00	INSTRUCTION MANUAL	E	
5	1A	*	E30-3644-08	DC CORD	K	
5	1A	*	E30-3645-08	DC CORD	E	
F1	2B		F06-3026-05	FUSE (3A)		
11	2A	*	F19-1214-08	BLIND PLATE		
-		*	H01-9100-08	ITEM CARTON CASE		
-		*	H10-4331-08	POLYSTYRENE FIXTURE		
-		*	H25-0338-04	PROTECTION BAG (250X350)		
-			H25-0112-04	PROTECTION BAG (180X270)		
-			H25-0251-04	PROTECTION BAG (60X150)		
6			J21-5301-08	MOUNTING HARDWARE		
8		*	N99-1542-08	SCREW SET		
A	2A		N09-1670-08	SCREW		
B	1A		N89-3008-45	SCREW		
C	3A		N09-2590-08	SCREW		
D	1A		N32-3006-45	SCREW		
E	1B		N29-0259-08	PUSH RIVET		
F	1B		N09-4026-08	SCREW (GND)		
G	1B		N15-1040-46	WASHER		
			ELECTRIC UNIT (WO2-1240-08)			
LED1			BR2232S	LED (POWER IND)		
C1			CK45F1H473Z	CERAMIC 0.047UF Z		
C2			CE04DW1C102M	ELECTRO 1000UF 16WV		
C3			CE04DW1A470M	ELECTRO 47UF 10WV		
C4			CE04DW1A102M	ELECTRO 1000UF 10WV		
C5			CE04DW1A101M	ELECTRO 100UF 10WV		
C6			CE04DW0J471M	ELECTRO 470UF 6.3WV		
C7,8			CE04DW1A101M	ELECTRO 100UF 10WV		
C9			CE04DW1C100M	ELECTRO 10UF 16WV		
C10,11			CE04DW1C470M	ELECTRO 47UF 16WV		
C12,13			CE04DW1C100M	ELECTRO 10UF 16WV		
C14			CE04DW1A221M	ELECTRO 220UF 10WV		
C15			CE04DW1C100M	ELECTRO 10UF 16WV		
C16,17			CE04DW1C470M	ELECTRO 47UF 16WV		
C18,19			CE04DW1C100M	ELECTRO 10UF 16WV		
C20			CE04DW1A221M	ELECTRO 220UF 10WV		

E: Scandinavia & Europe K: USA P: Canada
U: PX(Far East, Hawaii) T: England M: Other Areas
UE: AAFES(Europe) X: Australia

⚠ indicates safety critical components.

PARTS LIST

*New Parts Parts without Parts No.are not supplied.

Ref.No. 参照番号	Address 位置	New Parts 新	Parts No. 部品番号	Description 部品名／規格	Destination 仕向	Remarks 備考
			KEC−301			
1	1B	*	A52-0619-08	TOP COVER	K	
1	1B	*	A52-0620-08	TOP COVER	E	
2	2B	*	A23-5018-08	REAR PANEL	K	
2	2B	*	A23-5019-08	REAR PANEL	E	
3	1B	*	B19-0838-08	LIGTHING BOARD		
-			B44-6006-04	UPC CODE LABEL		
-			B44-2165-04	UPC CODE LABEL		
-			B46-0100-20	WARRANTY CARD		
-			B50-7984-00	INSTRUCTION MANUAL	K	
-			B50-7953-00	INSTRUCTION MANUAL	E	
5	1A	*	E30-3644-08	DC CORD	K	
5	1A	*	E30-3645-08	DC CORD	E	
F1	2B		F06-3026-05	FUSE (3A)		
11	2A	*	F19-1214-08	BLIND PLATE		
-		*	H01-9100-08	ITEM CARTON CASE		
-		*	H10-4331-08	POLYSTYRENE FIXTURE		
-		*	H25-0338-04	PROTECTION BAG (250X350)		
-			H25-0112-04	PROTECTION BAG (180X270)		
-			H25-0251-04	PROTECTION BAG (60X150)		
6			J21-5301-08	MOUNTING HARDWARE		
8		*	N99-1542-08	SCREW SET		
A	2A		N09-1670-08	SCREW		
B	1A		N89-3008-45	SCREW		
C	3A		N09-2590-08	SCREW		
D	1A		N32-3006-45	SCREW		
E	1B		N29-0259-08	PUSH RIVET		
F	1B		N09-4026-08	SCREW (GND)		
G	1B		N15-1040-46	WASHER		
			ELECTRIC UNIT (WO2−1240−08)			
LED1			BR2232S	LED (POWER IND)		
C1			CK45F1H473Z	CERAMIC 0.047UF Z		
C2			CE04DW1C102M	ELECTRO 1000UF 16WV		
C3			CE04DW1A470M	ELECTRO 47UF 10WV		
C4			CE04DW1A102M	ELECTRO 1000UF 10WV		
C5			CE04DW1A101M	ELECTRO 100UF 10WV		
C6			CE04DW0J471M	ELECTRO 470UF 6.3WV		
C7,8			CE04DW1A101M	ELECTRO 100UF 10WV		
C9			CE04DW1C100M	ELECTRO 10UF 16WV		
C10,11			CE04DW1C470M	ELECTRO 47UF 16WV		
C12,13			CE04DW1C100M	ELECTRO 10UF 16WV		
C14			CE04DW1A221M	ELECTRO 220UF 10WV		
C15			CE04DW1C100M	ELECTRO 10UF 16WV		
C16,17			CE04DW1C470M	ELECTRO 47UF 16WV		
C18,19			CE04DW1C100M	ELECTRO 10UF 16WV		
C20			CE04DW1A221M	ELECTRO 220UF 10WV		

E: Scandinavia & Europe K: USA P: Canada
U: PX(Far East, Hawaii) T: England M: Other Areas
UE: AAFES(Europe) X: Australia

⚠ indicates safety critical components.

PARTS LIST

*New Parts Parts without Parts No.are not supplied.

Ref.No. 参照番号	Address 位置	New Parts 新	Parts No. 部品番号	Description 部品名／規格	Destination 仕向	Remarks 備考
C21-23			CK45F1H473Z	CERAMIC 0.047UF Z		
C24			CE04DW1A102M	ELECTRO 1000UF 10WV		
C25			CE04DW1C471M	ELECTRO 470UF 16WV		
C101,102			CE04DW1C100M	ELECTRO 10UF 16WV		
C103,104			CF92V1H682J	MF 0.0068UF J		
C105,106			CF92V1H332J	MF 0.0033UF J		
C107,108			CE04DW1C100M	ELECTRO 10UF 16VW		
C109-112			CF92V1H333J	MF 0.033UF J		
C113-116			CE04DW1C100M	ELECTRO 10UF 16WV		
C117,118			CK45B1H221K	CERAMIC 220PF K		
C201-204			CF92V1H562J	MF 0.0056UF J		
C205-212			CE04DW1H2R2M	ELECTRO 2.2UF 50WV		
C213,214			CK45B1H221K	CERAMIC 220PF K		
C301-303			CE04DW1C220M	ELECTRO 22UF 16WV		
C304			CE04CW1HR33M	ELECTRO 0.33UF 50WV		
C305			CE04CW1HR15M	ELECTRO 0.15UF 50WV		
C306			CE04DW1C220M	ELECTRO 22UF 16WV		
C307			CE04CW1HR33M	ELECTRO 0.33UF 50WV		
C308			CE04CW1HR15M	ELECTRO 0.15UF 50WV		
C309			CE04DW1C220M	ELECTRO 22UF 16WV		
C310,311			CE04DW1C100M	ELECTRO 10UF 16WV		
C312,313			CE04DW1C220M	ELECTRO 22UF 16WV		
C314,315			CK45B1H221K	CEREMIC 220PF K		
C401,402			CE04DW1C100M	ELECTRO 10UF 16WV		
C403,404			CE04CW1HR15M	ELECTRO 0.15UF 50WV		
C405,406			CF92V1H683J	MF 0.068UF J		
C407,408			CE04DW1C100M	ELECTRO 10UF 16WV		
C409-412			CF92V1H333J	MF 0.033UF J		
C413-416			CE04DW1C100M	ELECTRO 10UF 16WV		
C417,418			CK45B1H221K	CERAMIC 220PF K		
C501-504			CE04CW1HR15M	ELECTRO 0.15UF 50WV		
C505,506			CE04DW1H100M	ELECTEO 10UF 50WV		
C507,508			CF92V1H682J	MF 0.0068UF J		
C509,510			CF92V1H332J	MF 0.0033UF J		
C511,512			CE04DW1H2R2M	ELECTRO 2.2UF 50WV		
C513-518			CE04DW1C100M	ELECTRO 10UF 16WV		
C519,520			CK45B1H221K	CERAMIC 220PF K		
C601-604			CF92V1H562J	MF 0.0056UF J		
C605-612			CE04DW1H2R2M	ELECTRO 2.2UF 50WV		
C613,614			CK45B1H221K	CERAMIC 220PF K		
E1-4	2B		E13-1407-08	PHONO JACK		
E5,6	1A		E06-0816-05	DIN SOCKET	E	
50	2B		J13-0071-05	FUSE HOLDER		
L1			L33-0348-08	CHOKE COIL		
R1			RD14BB2H821J	RD 820 J 1/2W		
R4			RD14BB2H821J	RD 820 J 1/2W		

E: Scandinavia & Europe K: USA P: Canada
U: PX(Far East, Hawaii) T: England M: Other Areas
UE: AAFES(Europe) X: Australia

⚠ indicates safety critical components.

PARTS LIST

*New Parts Parts without Parts No.are not supplied.

Ref.No. 参照番号	Address 位置	New Parts 新	Parts No. 部品番号	Description 部品名／規格	Destination 仕向	Remarks 備考
VR1	2B	*	R11-4641-08	POTENTIOMETER (50K) FREQUENCY		
VR2	2B	*	R10-3635-08	POTENTIOMETER (20K) LEVEL		
VR3	2B	*	R11-4641-08	POTENTIOMETER (50K) FREQUENCY		
VR4	2B	*	R10-3635-08	POTENTIOMETER (20K) LEVEL		
VR5	2A	*	R11-3631-08	POTENTIOMETER (20K) FREQUENCY		
VR6	2A	*	R10-3636-08	POTENTIOMETER (20K) LEVEL		
VR7	2A	*	R11-4641-08	POTENTIOMETER (50K) FREQUENCY		
VR8	2A	*	R10-3635-08	POTENTIOMETER (20K) LEVEL		
VR9,10	2A	*	R11-4641-08	POTENTIOMETER (50K) FREQUENCY		
VR11	2A	*	R10-3636-08	POTENTIOMETER (20K) LEVEL		
VR12	2A	*	R11-4641-08	POTENTIOMETER (50K) FREQUENCY		
VR13	2A	*	R10-3635-08	POTENTIOMETER (20K) LEVEL		
SW1	2B	*	S31-4646-08	SLIDE SWITCH (4-3) FREQUENCY		
SW2,3	2B	*	S31-2624-08	SLIDE SWITCH (2-2) PHASE		
SW4	2A	*	S31-4645-08	SLIDE SWITCH (4-2) MODE		
SW5	2A	*	S31-4647-08	SLIDE SWITCH (4-4) FREQUENCY		
SW6	2A	*	S31-2624-08	SLIDE SWITCH (2-2) PHASE		
SW7,8	2A	*	S31-4645-08	SLIDE SWITCH (4-2) ON-OFF		
SW9,10	2A	*	S31-2624-08	SLIDE SWITCH (2-2) PHASE		
D1			MPG06B	DIODE		
D2			MTZJ8.2B	ZENER DIODE		
D3			MPG06B	DIODE		
D4			MTZJ3.9A	ZENER DIODE		
D6,7			1SS131	DIODE		
D8			MTZJ8.2B	ZENER DIODE		
D9			MTZJ2.0A	ZENER DIOOE		
D10			1SS131	DIODE		
D11,12			MPG06B	DIODE	E	
IC1,2			NH384	IC (ISOLATION AMP)		
IC3-23			UPC4570C	IC (OP AMPx2)		
Q1-12			2SC3327	TRANSISTOR		
Q13			2SD1200	TRANSISTOR		
Q14			DTC114ES	DIGITAL TRANSISTOR		
Q15			DTA143ES	DIGITAL TRANSISTOR		
Q16,17			2SC1740S	TRANSISTOR		
Q18			2SA933S	TRANSISTOR		
Q19,20			2SC1740S	TRANSISTOR		

E: Scandinavia & Europe K: USA P: Canada
U: PX(Far East, Hawaii) T: England M: Other Areas
UE: AAFES(Europe) X: Australia

⚠ indicates safety critical components.

KEC-301

SPECIFICATIONS

Crossover Section

Crossover Frequency FRONT	**(Low)**	800 Hz—10 kHz (Variable)
	(High)	800 Hz—10 kHz (Variable)
Crossover Frequency REAR	**(Sub W.)**	30 Hz—150 Hz (Variable)
	(Low)	30 Hz—800 Hz (Variable)
	(Mid 1)	30 Hz—800 Hz (Variable)
	(Mid 2)	800 Hz—10 kHz (Variable)
	(High)	800 Hz—10 kHz (Variable)
Level Control	**(Front)**	— ∞— 0 dB
	(Sub W.)	— ∞—+10 dB
	(Rear)	— ∞— 0 dB
Low Cut Frequency	**(Front)**	Through, 80 Hz, 120 Hz (Selectable)
	(Rear)	Through, 50 Hz, 80 Hz, 120 Hz (Selectable)
Crossover Slope		12 dB/oct
Subwoofer Crossover Slope		12 dB/oct (Stereo) 18 dB/oct (Mono)

Audio Section

Input Impedance	10 kΩ
Output Impedance	600 Ω
Signal to Noise Ratio	100 dB
T.H.D.	0.01%
Frequency Response	20 Hz—100 kHz (—3 dB)

General

Operating Voltage	14.4 V (11—16 V)
Current Consumption	0.3 A
Dimensions (mm)	250 (W) × 45 (H) × 150 (D)
(inch)	9-13/16 (W) × 1-3/4 (H) × 5-7/8 (D)
Weight	1.4 kg (3.1 lb.)

Kenwood follows a policy of continuous advancements in development.
For this reason specifications may be changed without notice.

Kenwood poursuit une politique de progrès constants en ce qui concerne le développement.
Pour cette raison, les spécifications sont sujettes à modifications sans préavis.

Kenwood strebt ständige Verbesserungen in der Entwicklung an.
Daher bleiben Änderungen der technischen Daten jederzeit vorbehalten.

KENWOOD CORPORATION
Shionogi Shibuya Building, 17-5, 2-chome Shibuya, Shibuya-ku, Tokyo 150, Japan

KENWOOD U.S.A. CORPORATION
2201 East Dominguez Street, Long Beach, CA 90810;
550 Clark Drive, Mount Olive, NJ 07828, U.S.A.

KENWOOD ELECTRONICS CANADA INC.
P.O. BOX 1075, 959 Gana Court, Mississauga, Ontario, Canada L4T 4C2

TRIO-KENWOOD U.K. LIMITED
KENWOOD House, Dwight Road, Watford, Herts., WD1 8EB United Kingdom

KENWOOD ELECTRONICS BENELUX N.V.
Mechelsesteenweg 418 B-1930 Zaventem, Belgium

KENWOOD ELECTRONICS DEUTSCHLAND GMBH
Rembrücker-Str. 15, 6056 Heusenstamm, West Germany

TRIO-KENWOOD FRANCE S.A.
13 Boulevard Ney, 75018 Paris, France

KENWOOD LINEAR S.p.A.
20125, MILANO-VIA ARBE, 50, ITALY

KENWOOD ELECTRONICS AUSTRALIA PTY. LTD. (INCORPORATED IN N.S.W.)
4E Woodcock Place, Lane Cove, N.S.W. 2066, Australia

KENWOOD & LEE ELECTRONICS, LTD.
Wang Kee Building, 4th Floor, 34-37, Connaught Road, Central, Hong Kong